Australasian Journal of Philosophy

ISSN: 0004-8402 (Print) 1471-6828 (Online) Journal homepage: www.tandfonline.com/journals/rajp20

Black Hole Thermodynamics: A Crisis of Identity

Katie Robertson

To cite this article: Katie Robertson (2025) Black Hole Thermodynamics: A Crisis of Identity, Australasian Journal of Philosophy, 103:4, 887-905, DOI: 10.1080/00048402.2025.2488437

To link to this article: https://doi.org/10.1080/00048402.2025.2488437

© 2025 The Author(s). Published by Informa UK Limited, trading as Taylor & Francis Group

Published online: 17 Sep 2025.

Submit your article to this journal

Article views: 1227

View related articles

View Crossmark data

Full Terms & Conditions of access and use can be found at
https://www.tandfonline.com/action/journalInformation?journalCode=rajp20

AUSTRALASIAN JOURNAL OF PHILOSOPHY
2025, VOL. 103, NO. 4, 887–905
https://doi.org/10.1080/00048402.2025.2488437

OPEN ACCESS Check for updates

Black Hole Thermodynamics: A Crisis of Identity

Katie Robertson

University of Stirling

ABSTRACT
Do black holes expand for the same reason that cups of tea cool down? There is a striking similarity between the laws of black hole mechanics and the laws of thermodynamics; so striking, that some have gone as far as—indeed the orthodoxy in theoretical physics is—to say it is an identity. But others point out differences between the quantities associated to black holes and the quantities of ordinary thermal systems, like cups of tea and boxes of gas. How can we say black hole entropy *is* thermodynamic entropy when there are these differences? In this paper, I show to what extent the increasingly popular tool of functionalism can be used to understand the claim that S_{BH} *is* S_{TD}.

ARTICLE HISTORY Received 3 March 2023; Revised 17 July 2024

KEYWORDS black holes; thermodynamics; theoretical identity

1. Introduction

Black holes are mysterious beasts: points of infinite density that exert such a strong gravitational pull that straying too close means you'll never escape. Once you've crossed the event horizon there is no way out, not even for light. At the heart of the black hole, cloaked by the event horizon, is an object known as a 'singularity'; for this type of singularity, the curvature of spacetime becomes infinite.[1] Initially the solutions of General Relativity containing such singularities were thought 'unphysical': singularities, or such infinities, are often deemed a sickness of a theory that reveals its breakdown. But nowadays, there is little doubt that black holes exist: not only is there strong theoretical evidence, but in recent years impressive empirical evidence has allowed us to both 'see' a black hole (Akiyama, Alberdi, *et al.* 2019) and 'hear' two collide (Abbott, Jawahar, *et al.* 2016).[2] Understanding black holes is central to

[1] The definition of both black holes and singularities is a vexed question, cf. Curiel 2019a. The standard definition of a singularity is an incomplete inextensible causal curve. Not all singularities are black holes, since a core feature of a black hole is that it has an event horizon. Defining a black hole is surprisingly fraud with different features emphasized in different areas of physics; see Curiel 2019b.

[2] These are extraordinary scientific achievements, though the sense in we 'see' a black hole and 'hear' the gravitational waves from a black hole merger ring-down is of course somewhat metaphorical. But nonetheless some of these detection events can be understood be 'direct' in a certain sense, cf. Patton 2020; Elder 2025.

© 2025 The Author(s). Published by Informa UK Limited, trading as Taylor & Francis Group
This is an Open Access article distributed under the terms of the Creative Commons Attribution-NonCommercial-NoDerivatives License (http://creativecommons.org/licenses/by-nc-nd/4.0/), which permits non-commercial re-use, distribution, and reproduction in any medium, provided the original work is properly cited, and is not altered, transformed, or built upon in any way. The terms on which this article has been published allow the posting of the Accepted Manuscript in a repository by the author(s) or with their consent.

progress in theoretical physics, and has been the focus of giants in the field over the past 50 years. A pivotal point was Bardeen, Carter and Hawking's articulation of the laws of black hole mechanics in 1973. These laws of black hole mechanics state (Bardeen, Carter, and Hawking, 1973):

The Black Hole Zeroth Law The surface gravity of a stationary black hole is constant over its entire surface.

The Black Hole First Law A change in the total mass of the black hole is determined in a fixed way by changes in its area, angular momentum, and electric charge, so that the total quantity is conserved.

The Black Hole Second Law The area of the event horizon of a black hole cannot decrease.

These laws were derived from general relativity,[3] and despite their different conceptual origin, seem to mirror the laws of thermodynamics, as shown in the table below. From a historical perspective, this is surprising: general relativity describes spacetime and thermodynamics is a phenomenological theory whose development was driven by a desire to understand steam engines in the industrial revolution (Cercignani 2000; Curiel 2019a).[4] Not only do the laws of black holes mirror those of thermodynamics (Table 1), the no-hair theorems show that a black hole can be characterised by a few macroparameters—mass, angular momentum, charge (M, J, Q) much like an ordinary thermodynamic system can be characterised by pressure, volume and temperature (p, V, T).[5]

Table 1: Comparison of Thermodynamic and Black Hole Laws.

	Thermodynamics	Black Hole Mechanics
0th law	Two systems in thermal equilibrium with a third system are in equilibrium with each other, consequently there is a quantity temperature T which is constant across these systems.	κ is constant across the event horizon.
1st law	$dU = TdS + pdV$	$dM = \frac{1}{8\pi}\kappa dA + \Omega dJ$
2nd law	$dS_{TD} \geq 0$	$d\left(\frac{c^3}{4G\hbar}A\right) \geq 0$
3rd law	$dS_{TD} \to 0 \quad \text{as} \quad T \to 0$	It is impossible to achieve $\kappa \to 0$ in a finite number of steps.

The analogy between the laws of black holes and thermodynamics is suggestive, but taking it seriously would require assigning a non-zero temperature to a black hole. Hot bodies emit thermal radiation; imagine the glowing coals of a fire. But, according to general relativity, black holes are 'perfect sinks', and so the only reasonable temperature to assign to a black hole is absolute zero.[6] Thus, it looks like there is a formal, or mathematical, mirroring of the laws of thermodynamics by the laws of black holes—just like the mirroring of the simple harmonic motion in a pendulum and a circuit, the formal similarities between Newtonian gravitation and electrostatics, or the mathematical similarities between sources and sinks in fluid flows and the electromagnetic field.

[3] The first law can also be derived 'in other diffeomorphism covariant theories of gravity' (Wald 2001: 2).
[4] For more on the connection between thermodynamics and general relativity—aside from black holes—see Jacobson 1995.
[5] Assigning a mass to the black hole is not as straightforward as assigning properties to a thermodynamic system, but these issues can be overcome by using ADM techniques.
[6] See Curiel 2014 for a lone dissenting voice to this orthodoxy.

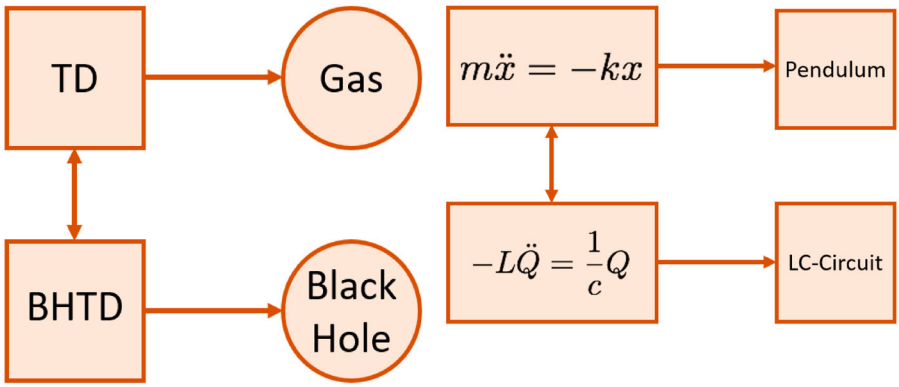

(a) Black holes and gases.

(b) LC-circuits and pendulums.

Figure 1: There is an analogy between the laws on the LHS that apply to gases and black holes, much like there is an analogy between the equations describing LC-circuits and pendulums.

The story takes a dramatic turn in 1974 with Hawking's result that black holes are not perfectly black, but in fact emit thermal radiation (Hawking, 1976).[7] This thermal radiation—known as Hawking radiation—means that black holes can be assigned a temperature (proportional to surface gravity of the horizon). Prior to this, the analogy was suggestive. After this, the connection between the laws of black holes and thermodynamics was quickly elevated from one of mere analogy to full-blooded identity. And this view is now the orthodoxy: one of the leading physicists in the field claims that 'the laws of black hole thermodynamics *are* the laws of thermodynamics' (Wald 2001: 29).

The idea is that quantities described by black hole mechanics are truly thermodynamic quantities; the orthodoxy is that the quantities are identical ($T = \kappa$, $A = S$, $E = M$). A black hole is assigned a temperature (proportional to the surface gravity) and an entropy (proportional to the area). The entropy of a black hole is called the Bekenstein-Hawking entropy, S_{BH}. Not only does the black hole have an entropy, the claim is that this *is* its *thermodynamic* entropy: $S_{BH} = S_{TD}$.

This is a startling claim. It seems to commit us to the following radical thesis: the feature of the universe that causes, or explains, the increasing area of black holes is the very same feature that causes, or explains, the cooling of the cup of coffee on your desk.

Not everyone is convinced. Dougherty and Callender (2016) throw some cold water on these identity claims by pointing to some differences between black holes and the ordinary thermodynamic cases. Surface gravity differs from thermodynamic temperature in various ways (for example: temperature is intensive, that is: independently of the size of the system—unlike surface gravity). Entropy usually scales with volume, not area. Furthermore, they argue that the laws of black hole mechanics are but

[7] The epistemic status of Hawking radiation—given how little hope there is of direct detection—is delicate. The consensus seems to be that whilst some arguments are not completely watertight, many different approaches lead to the same result, which suggests some form of robustness, although see Thébault, Palacios, and Gryb 2021 for further discussion.

'pale shadows' of ordinary thermodynamics. For example, they argue that the black hole zeroth law is not the full zeroth law, but merely a consequence of it. Dougherty and Callender are sceptical that there is more than an analogy here. Sure, the thermodynamic entropy of your coffee increases, and the black hole area increases—but lots of quantities increase over time, so what is so special about the relationship between black hole mechanics and thermodynamics?

One answer is that this is a particularly interesting analogy (Hesse 1966). Analogies abound in science, and can be influential in the development of a theory. To give a well-worn example, Maxwell's analogy between material fluids and electromagnetism were pivotal in his discovering his eponymous equations. In more recent times, the analogy between quantum field theories and some statistical systems facilitated Wilson's (Nobel prize winning) work on the renormalisation group (see Fraser 2020 for more on this). But to take a more homely example, a large variety of physical systems exhibit simple harmonic 'motion' (SHM) from the familiar swinging of a grandfather clock, electric resistance, a mass on a spring, and circular orbits. Lots of systems are analogous in that they display this simple harmonic motion, and it is hard to overstate the epistemological significance of simple harmonic motion (as Wilson 2017 emphasises). Why shouldn't we think that black hole entropy is merely analogous to the thermodynamic entropy? This option seems to cast doubt over the earlier identity claim.

If the connection is a mere formal analogy, then one might be tempted to relegate this connection between steam engines and black holes as mere inspiration for developing theories; inspiration can come from all sorts of sources, and must be taken it wherever it strikes. But this would seriously reduce the guiding influence, and justificatory role that black hole thermodynamics plays; in Bekenstein's earlier work on this topic, he justifies the increase of black hole entropy on the basis that *if not* there would be a violation of the ordinary second law. For example, throwing an entropic system like a large box of gas reduces the entropy of the universe outside of the black hole; if there is no increase of entropy of the black hole, then black holes can act as 'entropy sinks' that would allow violations of the thermodynamic Second Law (Bekenstein 1973: 3292).[8] Such a move is only justified if the connection between black holes and thermodynamics is stronger than one of mere formal analogy. So: is the connection one of identity or mere analogy?

This paper will zoom in on the question: *what does it mean to say that the black hole entropy is identical to thermodynamic entropy?* How should we understand the claim that $S_{BH} = S_{TD}$? Whilst here I will frame this debate as centering around entropy, the same issue—as seen above for temperature—could be raised for other quantities. Yet entropy is the thorniest of them all[9] and so we will tackle this quantity. The differences between these quantities puts straightforward identity

[8] This justification is no longer seen to be the key epistemic warrant for assigning an entropy to a black, as discussed in the rest of this paper, and see criticisms in Prunkl and Timpson 2019 of Bekenstein's argument. Moreover, it is not clear that decreasing the entropy of the rest of the universe would lead to a greater-than-Carnot efficiency engine, cf. Uffink 2006, and Wallace 2023.

[9] Famously Von Neumann told Shannon to rename what he had called his 'uncertainty function' entropy 'for two reasons. In the first place your uncertainty function has been used in statistical mechanics under that name, so it already has a name. In the second place, and more important, no one really knows what entropy really is, so in a debate you will always have the advantage.'

claims under pressure. But functionalism—an increasingly popular position in the philosophy of physics—seems offers a way out; if to be *X* is to play the *X* role, then perhaps differences can be tolerated. In Section 2, I discuss a related case study where functionalism helps, and Section 3 argues that black holes do behave like thermodynamic objects. But Section 4 discusses the limitations of functionalism for rebutting the cries of 'mere analogy'. Nonetheless these cries are silenced, and important differences from the SHM case emphasised, by considering the *interactions* between ordinary thermodynamic systems and black holes—and the law that governs such joint/hybrid systems, in Section 5. Having kicked suggestions of mere analogy to the curb, in Section 6 I consider how to parse '*X* is *Y*' claims. Section 7 concludes.

2. How Can Functionalism Help?

In a slogan, the functionalist claims that 'to be *X* is to play the *X* role'. Originating in the philosophy of mind, functionalism enjoys rising popularity in the philosophy of physics. Knox (2013, 2019), for example, argues that to be spacetime is to play the spacetime role, that is, to define inertial frames. Albert (2013) aims to functionally recover the familiar 3-dimensional world from the 3*N*-dimensional configuration space of quantum mechanics, in service of a view named wavefunction realism (see Ney 2021: Ch. 6 for criticisms). In his defence of the Everett interpretation, Wallace (2012: Ch. 2) uses functionalism to claim that macroscopic patterns in the wavefunction that behave like tigers *are* tigers. Lam (2018) suggest that functionalism might help us understand how spacetime emerges from a fundamentally non-spatiotemporal theory of quantum gravity. Gomes and Butterfield (2022) give a functionalist understanding of time from geometrodynamics. The list goes on.

Perhaps this popularity is unsurprising. Dennett remarks that 'Functionalism is the idea enshrined in the old proverb: handsome is as handsome does. Matter matters only because of what matter can do. Functionalism in this broadest sense is so ubiquitous in science that it is tantamount to a reigning presumption of all of science' (Dennett 2001). One reason—of many—that functionalism is useful in philosophy of physics: it emphasises that certain differences don't matter, which can be helpful when considering inter-theory relations. If the concepts of the higher-level theory are functional role concepts, then the lower-level realiser just has to play the same role, that is, have the same behaviour. For example, provided that 'C-fibers'[10] behave in the right way, they can be the realisers of pain, even though the physiological concepts of C-fibers differs from the psychological concept of pain. Similarly, as shown in Figure 2, provided a statistical mechanical quantity plays the right role, it can be the realiser of a thermodynamic quantity. As Dennett says 'functionalism in practice has a bias in favor of minimalism, of saying that less matters than one might have thought'. Functionalism thus conceived is a broad church, with a broad range of contexts it might be applicable to.

[10] Of course, we must point out that 'C-fibers' are a mere placeholder; it is an imaginary example suggested by philosophers of mind in the 1970s.

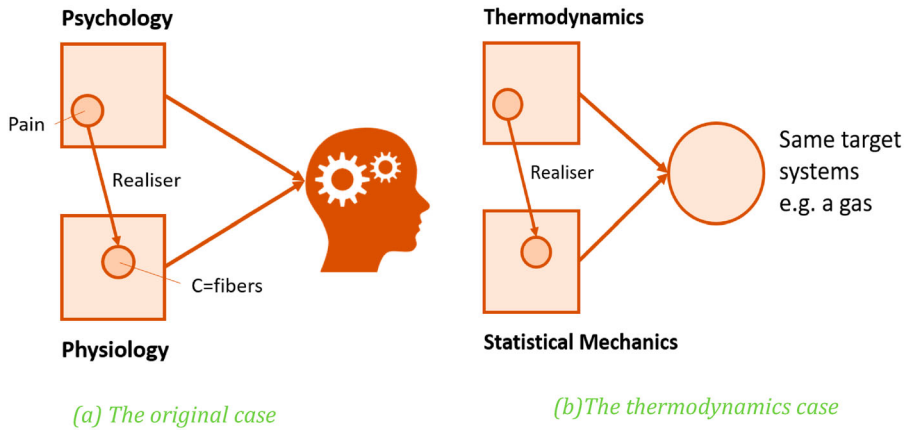

Figure 2: Similarly to how pain is realised by C-fibers, thermodynamic quantities can be realised by statistical mechanical quantities.

A similar issue to our black hole identity conundrum arises in another debate; the relationship between thermodynamics (TD) and statistical mechanics (SM). Here we find claims like 'the Gibbs entropy *is* the TD entropy', or 'mean kinetic energy *is* temperature' for an ideal gas. But there are differences; the Gibbs entropy involves probabilities, sometimes known as 'ensembles', unlike thermodynamic entropy. And Sklar (1993) worries about the temperature case: 'the "temperature equals mean molecular kinetic energy" bridge law identifies a fundamentally non-statistical quantity with a fundamentally statistical quantity. How is this supposed to work?' (Sklar 1993: 161, as quoted by Batterman 2010). In other words: how can they be identical?

Functionalism allows these differences to be tolerated. Provided that the differing feature is not part of the functional role, it does not matter. In the above example, provided that it is not part of the functional role of temperature that it is non-statistical, and provided that being a property of an individual system (rather than an ensemble) is not essential to the thermodynamic entropy, then these differences do not matter. Instead, the Gibbs entropy must play the thermodynamic role, that is, have the same behaviour (increasing in non-quasi-static processes, constant in quasi-static processes; see Robertson 2021). Similarly, for an ideal gas, mean kinetic energy must play the temperature role, that is, be the same for systems in mutual equilibrium.

The idea is then, perhaps, for the case of black holes, certain formal features (like being extensive) don't matter, provided that black holes behave like thermodynamic objects. Put another way, the domain of thermodynamics is extended to include new objects provided that the new objects behave in the right way. Naturally, this raises the question: what is the 'right way'?

This is where the hard work lies; functionalism doesn't get us out of the difficulties for free. Spelling out these functional roles involves detailed engagement with the physical theories at hand, as shown in the work of Knox and Butterfield and Gomes,[11] *inter alia*—and in the case of temperature and entropy above. So answering 'what is the

[11] I will avoid diving into the controversies about different types of functionalism in this paper, but it is worth noting that the Lewisian functionalism of Butterfield and Gomes 2020 markedly departs from the Dennettian functionalism glossed above.

required behaviour for a system to be described by thermodynamics' requires detailed engagement with, and interpretation of, thermodynamics.

Luckily, this issue has already been raised in the domain of gravitational thermodynamics (Wallace 2010; Callender 2011; Robertson 2019).[12] One answer to 'what features of thermodynamics are essential?' is two-fold: (i) equilibrium states are needed, as are (ii) the availability of quasi-static processes.[13] Do black holes have these two features? In the next section, I argue—drawing on Wallace 2018—the answer is yes.

3. Black Holes Behave Like Thermodynamic Objects

Equilibrium states are those where macroparameters, like volume, pressure and temperature, are unchanging in time. Thinking about black holes, and how certain properties they have, change over time is a delicate matter. Thinking of a black hole as region of spacetime—from which nothing, not even light, can escape—and then wondering how its properties change over time is nonsensical. Instead, we adopt a $(3 + 1)$, that is, a space + time, perspective, as many astrophysicists do when discussing black holes and considering how they change over their lifetime.[14]

Wallace (2018) follows Thorne, Thorne, *et al.* (1986) and Susskind, Thorlacius, and Uglum (1993) in considering what is known as the membrane paradigm. The membrane is a stretched horizon, one Planck area (that is, a very tiny amount) larger than the event horizon. This membrane is a closed 2-dimensional surface—imagine a spherical shell—cloaking the singularity at the centre of the black hole; since it is a time-like surface, we can assign properties to this surface and ask how they change over time.

But, on the face of it, the prospects do not look promising for assigning macroproperties to the membrane and discovering they are stationary. The thermodynamics of systems where gravity is no longer negligible, unlike the familiar case of the ideal gas in a box, is fraught with difficulty. In the Newtonian context of self-gravitating systems, gravity makes equilibrium states elusive. The attractive force of gravity implies that it is always favourable for the density of stars in a cluster, such as globular cluster of 10^5 stars, to increase and release energy to the more dispersed halo surrounding the core. This leads to a runaway instability known as the gravothermal catastrophe (Lynden-Bell, Wood, and Royal 1968). Equilibrium, let alone a whole space of such states which—at least in principle—the system can be induced to move between, seems out of reach.[15]

[12] Penrose 1979 discusses the need for the thermodynamic limit to exist, to show that systems are extensive, and so statistical mechanical and thermodynamic functions coincide exactly. This—to my eyes—is a non-starter from a functionalist point of view; it tells you about the mathematical connections between two theories rather than the behaviour of particular systems.

[13] There is no space for a full defence here cf. Robertson 2021 for more details. Roughly, the state space of thermodynamics is that of equilibrium, and key quantities such as entropy are defined by considering curves through that state-space which are usually thought to represent 'quasi-static' processes. But of course, which features are 'essential' is controversial. For example, Myrvold (2011) argues following Maxwell that the distinction between heat and work is essential to thermodynamics. Others, such as Carathéodory's framework and Lieb and Yngvarson's axiomatic approach, the term 'heat' is eliminated. Uffink (1996) claims that some distinction between different forms of energy transfer is key.

[14] The lifetime of the black hole, not the physicist.

[15] Wallace (2018: 8) 'the only gravity dominated systems (other than black holes) that have equilibrium states are degenerate matter objects like neutron stars and white dwarves, where quantum effects permit stability'.

Surprisingly, the black hole context is very different. Black holes have stationary states, equilibrium states, which are parameterised by three macroparameters: mass M, charge Q, and angular momentum J. These states are found by looking for stationary solutions for Einstein's equations (that is, the dynamical laws of General Relativity); Kerr-Newman black holes are the unique equilibria for Einstein-Maxwell theory. But more than stationarity is required: for truly thermodynamic equilibrium the system must converge to equilibrium from non-equilibrium and be stable in the face of small perturbations. These criteria can be met: perturbations to the stretched horizon by external gravitational bodies die away and the system returns to equilibrium (Thorne, Thorne, *et al.* 1986; Wallace 2018). This settling down to equilibrium involves the 'ringdown', the emission of gravitational waves so famously detected by LIGO.

Now what of quasi-static processes? Their status as an idealisation has been highly controversial (Norton 2016; Valente 2017; Ehrenfest-Afanassjewa 1956). Quasi-static processes are those that are slow enough that the system remains in equilibrium throughout; this means that a quasi-static process is an infinitely long processes. (The idea is that equilibrium means unchanging in time, thus slow changes to the state take the system less far from equilibrium, and in the limit, don't take the system away from equilibrium at all). The paradoxical nature of these processes is resolved by realising that 'infinity' can sometimes be a somewhat metaphorical concept in the heuristic heartlands of physics. Interventions to external parameters—such as inserting a piston or putting the system in contact with a heat bath—are required to knock the system out of equilibrium, and then it returns to a new, close by equilibrium state. If this knocking away from equilibrium is sufficiently gentle that the deviations from equilibrium are very small, and the processes happen on timescales much longer than the characteristic timescale of the system (for example, the time between collisions) then the real system will approximately instantiate this idealised 'quasi-static process'.[16]

Given this controversy, the prospects of understanding them in the contexts of black holes which are hardly amenable to our direct intervention seem dim. Yet—through the detailed studies of Christodoulou and Ruffini (1971), Penrose and Floyd (1971), and others—it does seem possible to model quasi-static processes for black holes. The mass can be altered by dropping matter into the black hole from infinitesimally close to the horizon. The charge can be changed in a quasi-static manner by lowering some charged matter very slowly to just above the horizon, and then letting go (Wallace 2018: 14). The angular momentum can be altered by using the Penrose process (Penrose and Floyd 1971). One key feature of quasi-static processes in thermodynamics is that there is no entropy change associated to them; in the above cases there is no change to the surface area of the black hole (Christodoulou and Ruffini 1971). Of course, these processes are 'available' in the sense of largely being thought experiments, but ones that show that the concept is rigorously defined; or, as at least as rigorously as it is in the ordinary thermodynamic context.

[16] Thermodynamics deals with very large systems, of the order of 10^{23} components—so large that heuristically they can be thought of as infinite. Tong gives the following enlightening illustration; imagine that the each of the 10^{23} particles can be in one of two states, up or down. That means that are $2^{10^{23}}$ possible microstates of the system. To get a sense of how large a number this is, Tong suggests thinking of it as a distance scale; he says 'it is effectively the same distance regardless of whether it is measured in microns or lightyears' (Tong 2012: 4).

Thus, I conclude that since black holes have both equilibrium states and quasi-static processes, they behave thermodynamically.

4. The Limits of Functionalism

It looks like black holes behave the right way, and so functionalist strategy for overcoming the 'differences objection' seems promising. But at this point we face a problem with the functionalist strategy: the 'mere-analogy' proponent has a possible comeback. This is because functionalism is a blunt tool in the identity vs. analogy debate, since functionalism blurs the line between analogy and identity in the following way:

- *X* is *analogous* to *Y* if *X* behaves like *Y*.
- Functionalism: X *is* *Y* if *X* behaves like *Y*.

This opens the door for the 'mere-analogy' proponent to respond to section 3 by saying: sure, you've shown that black holes behave *like* thermodynamic systems, but this doesn't mean they *are* thermodynamic systems. Pendulums behave *like* LC-circuits and this is the archetypal case of analogy!

One way of capturing the similarities is to say that there is in a sense an overarching theory 'Simple harmonic motion simpliciter' which applies to both the pendulum and the LC-circuit, represented by the orange box in Figure 3: a formal equation for the evolution of a variable y that is of the form, $ay = b\ddot{y}$. The details for a, y, and b get filled in differently in the different circumstances. Likewise, there is an abstract set of concepts common to *BH* and *BHTD*; something plays the role of equilibrium states (for example, some parameters A, B, C which are unchanging over time) plus the existence of some physical way to change these parameters such that an entropy-like quantity does not change—at least in principle. This fills out and specifies the commonalities between the similar systems, but this can still be understood as an analogy.

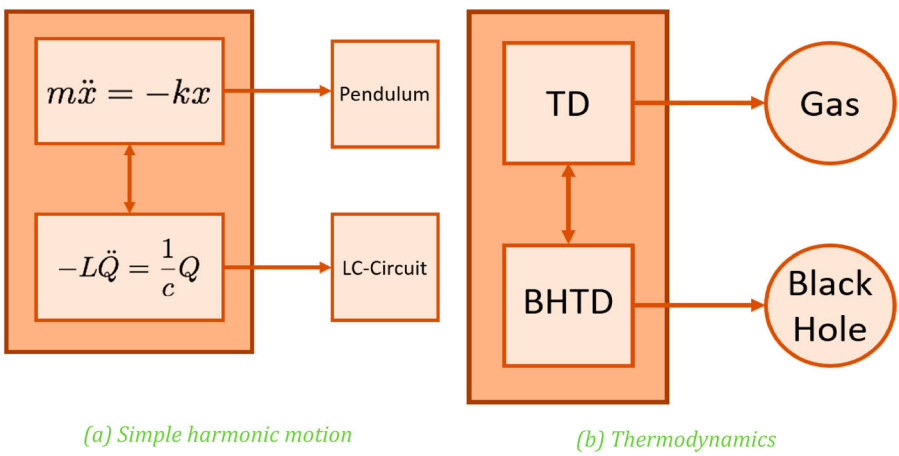

Figure 3: Does an overarching theory (represented by the orange box) capture the similarities?

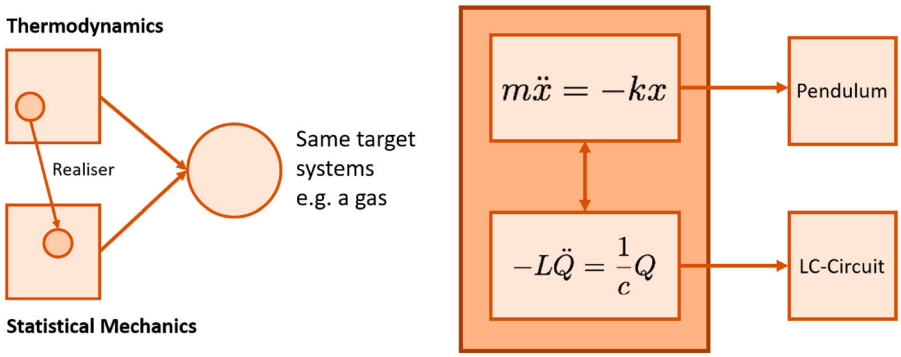

(a) *The same target system* (b) *Distinct systems like SHM.*

Figure 4: Distinct target systems versus the same target system.

Of course, functionalism may be a blunt tool for distinguishing between identity and analogy, but there is nonetheless a clear difference between them. Spatial displacement behaves like charge but would be ludicrous to say that it *is* charge. We don't say that capacitance *is* spring constant, or that spatial displacement *is* charge. Why? Because these equations are about distinct types of target systems unlike the functional realisation case, shown in Figure 4. If the arrows from left to right are to distinct target systems, there's no danger of identifying (or saying '*X* is *Y*' about) quantities related by the vertical arrows. Instead, the more appropriate thing to say is that charge *is to* spatial displacement as capacitance *is to* the spring constant.

What does it mean to say that there are *distinct* systems? One way to understand this that the systems are non-interacting; generically there is no interaction between LC-circuits and pendulums. Likewise, generically C-fibers and D-fibers are non-interacting. But what of black holes and ordinary thermodynamic systems like a gas; are these non-interacting and so distinct systems? No. In the next section, I discuss how black holes and ordinary thermal systems can interact unlike what we expect of circuits, pendulums and C- and D-fibers. Moreover, black holes and ordinary thermal systems interact in a paradigmatically thermodynamic way, which lays the 'mere analogy' objection to rest.

5. The Final Nail in the 'Mere Analogy' Coffin: Interactions

How do a black hole and an ordinary thermodynamic system like a gas interact? It looks like the black hole will just gobble up the gas with no time for anything like thermal equilibrium to be reached, except for perhaps the tiny 'burp' of thermal radiation the black hole gives off, Hawking radiation. But, as is ever the case with this story, appearances deceive. Black holes *can* be in thermal contact with other systems, as follows.

The key is that the black hole must be put in a box. Wallace (2018) emphasises that this is not a constraint required only for black holes—any radiating system needs to be put in a box which fills, or is already filled, with thermal radiation (or have the energy dissipated due to radiation idealised away). Like many gravitational systems, black holes have negative heat capacity—so when energy is transferred as heat, they

counterintuitively cool down. This means that the equilibrium is an unstable equilibrium—a small fluctuations of heat flowing from the gas to the black hole will make the black hole cool, introducing a temperature difference that leads to more heat flow from the gas to the black hole. However, provided that the magnitude of the heat capacity of the black hole (which can be thought of as its 'thermal inertia') is greater than that of the gas, $|C_v^{BH}| \geq |C_v^G|$, we won't get runaway instability (where more and more heat flows from the gas to the black hole, and no equilibrium is reached). There are other constraints and conditions; one related condition is that there is an upper limit on the size of the box (Hawking 1976; Custodio and Horvath 2003; see also Wallace 2018; Prunkl and Timpson 2019).[17]

Hawking radiation provides one way of establishing thermal contact between a black hole and the other system. Another is 'black hole mining' (see Unruh and Wald 1983 for more details). But to my eyes one of the most impressive ways to see that not only can black holes and ordinary thermodynamic systems can be in thermal contact, but they also interact in a thermodynamic manner is shown by having a Carnot cycle with a black hole as the working substance. The Carnot cycle is the lynchpin of phenomenological thermodynamics; a series of isothermal (constant temperature) and adiabatic (thermally isolated) compressions and expansions that define the maximum efficiency of an engine. This maximum efficiency of an engine is one statement of the Second law of thermodynamics. This cycle is how we define the thermodynamic entropy of a system in state B from considering the heat flow during such a Carnot cycle, $\int_0^B \frac{dQ}{T} = S_{TD}(B)$.

In the work of Prunkl and Timpson (2019), the Carnot cycle involves a black hole and a photon gas (but see Wallace 2018: 29 for a discussion of a Carnot process between two black holes). There are a few nuances and caveats, but the key result is that a black hole in equilibrium with a photon gas in a box can undergo a (reverse) Carnot cycle. Black holes interact with ordinary thermodynamic systems in a paradigmatically thermodynamic manner.[18]

Moreover, there is a law governing these joint systems: the Generalised Second Law.[19] 'The generalized second law (GSL) directly links the laws of black hole mechanics to the ordinary laws of thermodynamics' (Wald 2001: 2). This law states that the *sum* of the black hole entropy and entropy associated to matter on the exterior of the black hole cannot decrease. One way to gloss this is that entropy is *fungible*. Or in other words, it can be transferred to and from the degrees of freedom (DOF) associated to ordinary matter to the DOF of the black hole. The status of the GSL in different theories is controversial; see Wall for a dizzying array of proofs.[20]

[17] Not only can black holes be put in contact with ordinary thermal systems and be shown to behave thermodynamically, as we will see in the remainder of this section, black holes can also be put in thermal contact with another black hole. If this is the case, then the other must be suitably far away that their gravitational attraction is negligible. If the radiation of the black hole is hotter than the other system—which could, say, be a photon gas, then heat will flow from the black hole to the photon gas. If the photon gas is hotter, then heat flows from the gas to the black hole, see inter alia Wallace 2018: 28, for more details.

[18] Earlier discussions of the importance of interactions include Curiel 2014 and inter alia, Sciama 1976.

[19] Sidenote: of course, detractors from BHT might claim that the principle is not well-enough established to earn the honorific 'law' but this now departs from reasonable scepticism to a fringe view.

[20] Here we gloss over many epistemic concerns and controversies about whether we should believe certain parts of quantum field theory on curved spacetime.

Originally the GSL was introduced to overcome the possibility of violations to both the Second law of Black holes and the Second law of thermodynamics (Bekenstein 2020); arguably this—unlike the subsequent proofs (Wall 2009; Wall 2010, 2012)—does not offer a good epistemic warrant for the GSL;[21] but it does offer a vivid way to understand the content of the GSL, as follows. If I throw my cup of coffee—a stereotypically thermodynamic system—into a black hole, then there has been a decrease of thermodynamic entropy in the universe (although since this hasn't allowed me to have a greater-than-Carnot efficiency engine this is not on its own a violation of the second law of thermodynamics). And if a black hole smoulders giving off Hawking radiation, it will evaporate—and so violate (a key assumption of) the area theorem. The GSL says that there are compensating increases in entropy for these seeming decreases.

Another way of phrasing the GSL is to define a new quantity, the Generalised entropy which is the sum of the black hole entropy and the entropy of the DOF of the exterior to the black hole $S_{Gen} = S_{BH} + S_{ext}$. The GSL then simply states that this quantity S_{Gen} can't decrease; $S_{Gen} \geq 0$. This now looks very similar to the *ordinary* second law, and indeed Harlow says that the GSL 'is really just the ordinary second law' (2016: 34). This gloss can be contested: yes, it is true that usually we think about the contributions from different DOF; the entropy of the system DOF might decrease (for example, in an isothermal compression) but the entropy of the bath DOF increases such that $\Delta S_{sys} + \Delta S_{bath} \geq 0$. Yet there certainly seems to be a sense in which the GSL appears like a *new* law; not only it is an intellectual achievement,[22] the conceptual origins and the epistemic status of the two terms certainly differs.[23]

However, answering the question 'is the GSL a distinct law from the OSL' will depend on how we individuate laws[24], and the ultimate grounds of the GSL in the more fundamental theory (see Wall 2009 for a survey of different proofs of the GSL in different regimes—and their attendant problems.) But currently we do not have a proof from full quantum gravity, since we don't have a theory of quantum gravity. That is not say the GSL is not established, but whether it has the same roots as the OSL might depend on these—as yet unknown—fundamental details.[25] The jury is out on that question. But one thing is clear: black hole and ordinary thermodynamic systems can interact.

To sum up: whilst there are many interesting questions about the GSL; its unusual epistemic nature, how to prove the GSL and how it is connected to the underlying theory, the crucial point here is that the GSL cements the idea that black holes and

[21] It is unclear that we have the epistemic warrant to think that the second law can never be violated; for example, fluctuations arguably give examples of small violations. In any case, it is unclear that these 'dumping entropy' examples really do show a violation, see Prunkl and Timpson 2019 for more discussion on this point, and the rejection of the information-theoretic reasoning for the GSL.

[22] Even if the GSL is just the OSL this would still hold true; since the domain of thermodynamics needn't have automatically included black holes.

[23] For example, Curiel 2019a discusses how the area theorem comes from deep, rigorous mathematics whereas the ordinary second law is thought to have a more approximate, or phenomenological character. Likewise, Wald says 'The area increase law bears a resemblence to the second law of thermodynamics in that both laws assert that a certain quantity has the property of never decreasing with time. It might seem that this resemblence is a very superficial one, since the area law is a theorem in differential geometry whereas the second law of thermodynamics is understood to have a statistical origin.' (Wald 2001: 5).

[24] Should we think of Newton's law in their restricted domain of success as distinct from the laws of special relativity?

[25] For example, some suggest that both the black hole entropy and the usual statistical entropy come from the entanglement entropy—but whether this is really the case will depend on how we resolve the cut off at the horizon, which in turns depends on quantum gravity (Wall 2009: 14).

thermal systems outside the black hole can *interact*. And in doing so, their interactions and subsequent behaviour can be characterised using thermodynamics (Figure 5)—unlike any putative interactions between different system displaying simple harmonic motion. For example, a pendulum and a circuit might interact, but the interactions are not characterised using the equations of simple harmonic motion.

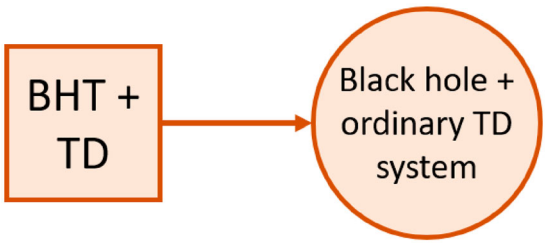

Figure 5: Elements of both ordinary thermodynamics and black hole thermodynamics are used to describe the joint system of a black hole interacting with an ordinary thermodynamic system.

6. Parsing '*X* is *Y*' Claims

The idea that the connection between black holes and ordinary thermal systems is one of mere analogy can be lain to rest. But this still leaves us with the question: 'how should we understand the claim that the black hole entropy *is* the thermodynamic entropy'? This question arises in other contexts too. What does it mean to say that for an ideal gas, mean kinetic energy *is* temperature? Or that the Gibbs entropy *is* the thermodynamic entropy? In this section, I first rule out a hopeless option, and then look to related debates in the literature for help.

The first, hopeless, option: conceptual identity. It is fairly straightforward that these quantities are not conceptually identical; this is exactly what Sklar was concerned about with mean kinetic energy being statistical and temperature being non statistical. Likewise, the Gibbs entropy involves probabilities alien to phenomenological thermodynamics, and the thermodynamic entropy involves heat, a quantity that is, at the very least, contentious to understand in the SM context (Maroney 2007; Myrvold 2011). And to continue the theme, the black hole entropy depends on G, $\hbar$ and the area of an event horizon—a far cry from heat flow familiar from S_{TD}.[26]

Much of the literature on identity in physics has focussed on Leibniz's Principle of the Identity of Indiscernibles and whether quantum objects (such as two electrons in a singlet state) can be individuated (French and Redhead 1988; Saunders 2003; Ladyman and Bigaj 2010; Shumener 2020). There the problem is slightly different: in that debate, the problem is that things look too similar *not* to be identical. Here the problem is that things look too different to be identical. The converse, the Principle of the Indiscernibility of Identicals, rules that since the two entropies can be discerned, they are not identical.

The PIIs cannot help. But the distinction between the 'is' of identity and the 'is' of predication (or instantiation) can.[27] This well-known distinction occurs in Frege,

[26] And as a general point, if there's any kind of conceptual holism, then quantities from different theories will always be distinct.
[27] Thanks to James Ladyman for this suggestion.

although it is thought to date back to Plato's Sophist.[28] In the sentence 'The morning star is the evening star', 'is' means 'is identical to'. In contrast, in the sentence 'Socrates is mortal', a property 'being mortal' is predicated of Socrates; or we can that this property is instantiated by Socrates (Mirin 2019). The 'is' of predication, or instantiation allows for a great deal of difference (Baxter 2013; 2018). In his critique of Tegmark's Pythagoreanism, Butterfield (2014) argues that we needn't think there is a literal identity between abstract mathematical structures and concrete physical structures: rather, the latter instantiate the former, and can differ provided the difference is non-structural.[29] With this distinction in hand, we can predicate of S_{BH} that is has the property of being thermodynamical. Or, in language more familiar to physics and the philosophy of physics, the black hole entropy instantiates the thermodynamic entropy.

Yet there is room to push back, and to argue in favour of identity rather than instantiation. For example, one might argue that whilst conceptually different, these quantities nevertheless pick out the same features of the world, much like how 'Clark Kent' and 'Superman' are conceptually different but extensionally equivalent. This is a tempting line, especially in putative cases of reduction like SM and TD. The story would go something like: we thought there was something called thermodynamic entropy but after all it just turned out to be another way of talking about Gibbs entropy, since the two terms are extensionally equivalent. Arguably this is an outdated way of thinking about reduction (Batterman 2001; Rosaler 2015), but regardless of that issue, it is unsuccessful.

This is because it is not clear that they *are* extensionally equivalent, since they have different domains: sometimes a system has a quantity X but not Y, and so X and Y are not extensionally equivalent. This is particularly clear when we think about the Shannon entropy; the Shannon entropy *is* the Gibbs entropy in certain contexts (for example, in the case of the probability distribution being the canonical distribution), but the domain of the Shannon entropy extends wildly beyond the thermal physics regime to include abstract ideas of communication. Similarly, the Gibbs entropy applies away from equilibrium, so its domain differs from that of the thermodynamic entropy. Temperature is multiply realised; its domain extends beyond cases where we can talk about mean kinetic energy. Similarly, thermodynamic entropy applies to domain *outside* of the domain of black holes.

But there is a way to rescue the extensional equivalence of quantities in the face of distinct domains of applicability. The response, I think, is to say that once you've fixed the token—not only the target system but the very particular context and domain of applicability, such as 'being at equilibrium', then S_G and S_{TD} pick out the same quantity much like C-fibers and pain pick out the same quantity *in that token system*; recall Figure 2. There is 'local' extensional equivalence, without 'global' extensional equivalence; token identity without type identity.[30]

Should we then revert back to understanding 'is' as identity rather than instantiation? I think not. Not only is the type identity case the more important and interesting than the token identity case—after all, scientists deal in generalisations about *types*

[28] Somewhat unhelpfully—although perhaps it explains why many have $X = Y$ claims to represent identity —Frege distinguishes the copula 'is' (of prediction) from the is of identity which he says is used like 'the equals' sign in arithmetic to express an equation.

[29] Butterfield's criticism is that Tegmark moves from Platonism to Pythagoreanism by conflating the 'is' of identity with the 'is' of instantiation.

[30] Of course, this distinction depends on how finely we individuate types.

rather than tokens, the token identity is quite toothless. One mathematical feature of identity is that it is transitive, reflexive and symmetric. But transitivity (and symmetry) do not hold in our cases of 'X is Y': 'X is Y' and 'Z is Y' does not mean that 'X is Z'. For example, S_{BH} is S_{TD} and S_G is S_{TD} but this doesn't imply that S_G is S_{BH}. Likewise in the case of pain and C-fibers and D-fibers. Indeed, in light of multiple realisability, this is all wholly unsurprising.

Keeping the distinct extensions—and the target systems—apart is important. S_{BH} is S_{TD} but S_{TD} has a much broader extension than S_{BH}: it applies to ordinary matter such as that in the *exterior* of a black hole. If we conflate the extension of S_{BH} and S_{TD} we risk obfuscating that S_{TD} applies to DOF outside the black hole. And this obfuscation then makes the GSL seem nonsensical: if S_{BH} and S_{TD} refer to the very same extension in the world, how can one decrease whilst the other decreases? The answer is that S_{BH} and S_{TD} are extensionally equivalent only when we have picked out the token DOF (that is, the black hole) under consideration. Clearly, for a gas, S_{BH} and S_{TD} are *not* extensionally equivalent: only the latter is defined! 'X is Y' does not mean 'X is extensionally identical to Y'.

All of these complications fade when we take the 'is' of instantiation; the transitivity and symmetry is not expected, and being extensionally equivalent is not expected. Moreover we can further finesse this view by connecting it to our earlier functionalism. If we understand 'X is Y' as 'X instantiates the Y-property' or 'X has Y-ness' or 'X has a Y-like nature', then there is an immediate connection to functionalism; X has a Y-like nature if it plays the Y-role. Black hole entropy has a thermodynamic nature, if it plays the right role. S_{BH} instantiates the property of being thermodynamic if it plays, or *realises* (to use functionalist jargon), the S_{TD}. In other words, the 'is' claim is one of instantiation, and this instantiation relation can be given a functionalist gloss as a role-realiser relation. *This* is the sense in which S_{BH} *is* S_{TD}.

Yet earlier we saw that functionalism was a blunt tool for rebutting analogies; why doesn't the same problem recur here? Functionalism doesn't solve the analogy vs. identity problem, but once that issue has been solved (by establishing whether the same behaviour occurs on distinct or one (albeit bipartite interacting) system, then we can parse 'X is Y' in these functionalist terms. This second invocation of functionalism to understand the relationship between properties is both distinct from our first use of functionalism to see if black holes behaved in the right way for thermodynamics to be applicable, and is also optional. If you have a preferred alternative way to understand 'instantiation' then by all means—use that. But this functionalist or 'realisation' understanding of instantiation does at least seem to fit with the debate about black holes; for example, Prunkl and Timpson for example move between talking about identity to saying 'many physicists take black hole entropy to be of a thermodynamic nature' (2019: 8).

7. Conclusion

The key question: what does it mean to say that the black hole entropy is the thermodynamic entropy? We should eschew the 'is' of identity and focus on the 'is' of instantiation; this makes differences between X and Y unmysterious. This fits nicely with the functionalist view according to which 'to have the property of being thermodynamic' is to play the right role. But functionalism cannot help rebut those claiming it is a mere analogy. For this story above—functionalist understanding of 'X is Y' to to work—we

need to establish that X and Y are quantities in the same (or two interacting) systems. This prevents nonsensical claims like 'capacitance is spatial displacement' which should instead be rendered as an analogy: 'X is to Y, *as* A is to B'. In the case of statistical mechanics and thermodynamics, we know that their respective quantities are quantities of the same system: an ideal gas.[31] Some cases, like that, are more obvious than others. In the case of black holes, we had to see how black holes *interact* with ordinary thermal systems—and show that this composite system behaves *thermodynamically*. The use of a black hole in the most paradigmatic of thermodynamic models—a Carnot cycle—makes the joint behaviour seem clearly thermodynamic. Hawking radiation was really important here, as it is one of the principle ways to establish thermal contact between the black hole and the other system. Leaving aside worries about the status of Hawking radiation, this is wholly unsurprising; Hawking radiation was the catalyst for the identity claims in the first place.

Of course, others might claim that *other* features of thermodynamics are the essential ones; just like some may claim that 'quacking' is not essential duck-like behaviour. This part of the functionalist project is an interpretational one; and the path to alternative interpretations is open. But the interpretation here does have one clear merit, I think: it makes sense of the sweeping orthodoxy in the physics community, according to which thermodynamics, a theory arising from engineering and pragmatic projects in the industrial revolution, sheds light on some of the most important, yet inaccessible, objects in the universe: black holes.

Acknowledgements

I would like to thank audiences at seminars in Glasgow, Bristol, Bonn and the Harvard Black Holes Initiative. I would also like to thank Erik Curiel, Alex Franklin and Tushar Menon and two anonymous referees for detailed comments on previous drafts. This paper has been stewing for many years, and I'd like to thank the Cambridge Philosophy of Physics reading group, David Wallace, Eleanor Knox and the FraMEPhys group, especially Al Wilson, for discussion. I am grateful for the Leverhulme Trust for an Early Career Fellowship, during which this paper was written.

Disclosure Statement

No potential conflict of interest was reported by the author(s).

Funding

This work was funded by a Leverhulme Trust Early Career Fellowship.

ORCID

Katie Robertson http://orcid.org/0000-0002-0645-0761

[31] Of course, SM and TD arguably have different domains: traditionally TD only applies to equilibrium systems. But these differing domains—whilst important for emphasising that X and Y are not extensionally equivalent—are set aside here. We already have to narrow down from working at the level of the whole theory to particular models of the theory; for example, the claim 'temperature is mean kinetic energy' is *only* applicable in the case of the ideal gas. In other words, multiple realisability means that we have already zoomed down to more local systems.

References

Abbott, B P, R Abbot, T D Abbot, M R Abernathy, F Acernese, *et al.* (2016) 'GW150914: First Results from the Search for Binary Black Hole Coalescence with Advanced LIGO', *Physical Review D* **93**: 122003. doi:10.1103/PhysRevD.93.122003.

Akiyama, Kazunori, Antxon Alberdi, Walter Alef, Keiichi Asada, Rebecca Azulay, *et al.* (2019) 'First M87 Event Horizon Telescope Results. IV. Imaging the Central Supermassive Black Hole', *The Astrophysical Journal Letters* **875**: L4. doi:10.3847/2041-8213/ab0e85.

Albert, David Z (2013) 'Wave Function Realism', in A Ney and D Z Albert, eds., *The Wave Function: Essays in the Metaphysics of Quantum Mechanics.*: 52–57. Oxford University Press.

Bardeen, J, B Carter, and S W Hawking (1973) 'The Four Laws of Black Hole Mechanics', *Communications in Mathematical Physics* **31**: 161–70, doi:10.1007/BF01645742.

Batterman, Robert (2001) *The Devil in the Details: Asymptotic Reasoning in Explanation, Reduction, and Emergence*. Oxford University Press.

Batterman, Robert (2010) 'Reduction and Renormalization', in A Hütteman, ed., *Time, Chance, and Reduction: Philosophical Aspects of Statistical Mechanics*: 159–79. Cambridge University Press.

Baxter, Donald L M (2013) 'Instantiation as Partial Identity: Replies to Critics', *Axiomathes* **23**: 291–99. doi:10.1007/s10516-013-9212-9.

Baxter, Donald L M (2018) 'Temporary and Contingent Instantiation as Partial Identity', *International Journal of Philosophical Studies* **26**: 763–80. doi:10.1080/09672559.2018.1542273.

Bekenstein, Jacob D (1973) 'Black Holes and Entropy', *Physical Review D* **7**: 2333. doi:10.1103/PhysRevD.7.2333.

Bekenstein, Jacob D (2020) 'Black Holes and Entropy', in *Jacob Bekenstein: The Conservative Revolutionary*: 307–20. World Scientific.

Butterfield, Jeremy (2014) 'Our Mathematical Universe?'. doi:10.48550/arXiv.1406.4348.

Butterfield, Jeremy and Henrique Gomes (2020) 'Functionalism as a Species of Reduction'. doi:10.48550/arXiv.2008.13366.

Callender, Craig (2011) 'Hot and Heavy Matters in the Foundations of Statistical Mechanics', *Foundations of Physics* **41**: 960–81. doi:10.1007/s10701-010-9518-z.

Cercignani, Carlo (2000) *Ludwig Boltzmann: The Man Who Trusted Atoms*. Oxford University Press.

Christodoulou, Demetrios and Remo Ruffini (1971) 'Reversible Transformations of a Charged Black Hole', *Physical Review D* **4**: 3552. doi:10.1103/PhysRevD.4.3552.

Curiel, Erik (2014) 'Classical Black Holes Are Hot'. doi:10.48550/arXiv.1408.3691.

Curiel, Erik (2019a) 'Singularities and Black Hole', in Edward N Zalta, ed., *Stanford Encyclopedia of Philosophy*. Metaphysics Research Lab, Standford University. https://plato.stanford.edu/archives/spr2019/entries/spacetime-singularities.

Curiel, Erik (2019b) 'The Many Definitions of a Black Hole', *Nature Astronomy* **3**: 27–34. doi:10.1038/s41550-018-0602-1.

Custodio, P S and J E Horvath (2003) 'Thermodynamics of Black Holes in a Finite Box', *American Journal of Physics* **71**: 1237–41. doi:10.1119/1.1590656.

Dennett, Daniel (2001) 'Are We Explaining Consciousness Yet?', *Cognition* **79**: 221–37. doi:10.1016/S0010-0277(00)00130-X.

Dougherty, John and Craig Callender (2016) 'Black Hole Thermodynamics: More Than an Analogy?'. https://philsci-archive.pitt.edu/13195/.

Ehrenfest-Afanassjewa, Tatiana (1956) *Die Grundlagen Der Thermodynamik*. E J Brill.

Elder, Jamee (2025) 'On the "Direct Detection" of Gravitational Waves', *Studies in History and Philosophy of Science* **110**: 1–12. doi:10.1016/j.shpsa.2025.01.002.

Fraser, Doreen (2020) 'The Development of Renormalization Group Methods for Particle Physics: Formal Analogies Between Classical Statistical Mechanics and Quantum Field Theory', *Synthese* **197**: 3027–63. doi:10.1007/s11229-018-1862-0.

French, Steven and Michael Redhead (1988) 'Quantum Physics and the Identity of Indiscernibles', *The British Journal for the Philosophy of Science* **39**: 233–46. doi:10.1093/bjps/39.2.233.

Gomes, Henrique and Jeremy Butterfield (2022) 'Geometrodynamics as Functionalism about Time', in Claus Kiefer, ed., *From Quantum to Classical*: 135–78. Springer.

Harlow, Daniel (2016) 'Jerusalem Lectures on Black Holes and Quantum Information', *Reviews of Modern Physics* **88**: 015002. doi:10.1103/RevModPhys.88.015002.

Hawking, S W (1976) 'Black Holes and Thermodynamics', *Physical Review D* **13**: 191–97. doi:10.1103/PhysRevD.13.191.

Hesse, Mary (1966) *Models and Analogies in Science*. University of Notre Dame Press.

Jacobson, Ted (1995) 'Thermodynamics of Spacetime: The Einstein Equation of State', *Physical Review Letters* **75**: 1260. doi:10.1103/PhysRevLett.75.1260.

Knox, Eleanor (2013) 'Effective Spacetime Geometry', *Studies in History and Philosophy of Modern Physics* **3**: 346–56. doi:10.1016/j.shpsb.2013.04.002.

Knox, Eleanor (2019) 'Physical Relativity from a Functionalist Perspective', *Studies in History and Philosophy of Science Part B: Studies in History and Philosophy of Modern Physics* **67**: 118–24. doi:10.1016/j.shpsb.2017.09.008.

Ladyman, James and Tomasz Bigaj (2010) 'The Principle of the Identity of Indiscernibles and Quantum Mechanics', *Philosophy of Science* **77**: 117–36. doi:10.1086/650211.

Lam, Vincent and Christian Wüthrich (2018) 'Spacetime Is as Spacetime Does', *Studies in History and Philosophy of Science Part B: Studies in History and Philosophy of Modern Physics* **64**: 39–51. doi:10.1016/j.shpsb.2018.04.003.

Lynden-Bell, D and Roger Wood (1968) 'The Gravo-Thermal Catastrophe in Isothermal Spheres and the Onset of Red-Giant Structure for Stellar Systems', *Monthly Notices of the Royal Astronomical Society* **138**: 495–525. doi:10.1093/mnras/138.4.495.

Maroney, Owen J E (2007) 'The Physical Basis of the Gibbs-von Neumann Entropy'. doi:10.48550/arXiv.quant-ph/0701127.

Mirin, Alison (2019) 'The Relational Meaning of the Equals Sign: A Philosophical Perspective', in Aaron Weinberg, Deborah Moore-Russo, Hortensia Soto and Megan Wawro, eds., *Proceedings of the 22nd Annual Conference on Research in Undergraduate Mathematics Education (RUME)*: 783–91.

Myrvold, Wayne C (2011) 'Statistical Mechanics and Thermodynamics: A Maxwellian View', *Studies in History and Philosophy of Science Part B: Studies in History and Philosophy of Modern Physics* **42**: 237–43. doi:10.1016/j.shpsb.2011.07.001.

Ney, A (2021) *The World in the Wave Function: A Metaphysics for Quantum Physics*. Oxford University Press.

Norton, J D (2016) 'The Impossible Process: Thermodynamic Reversibility', *Studies in History and Philosophy of Science Part B: Studies in History and Philosophy of Modern Physics* **55**: 43–61. doi:10.1016/j.shpsb.2016.08.001.

Patton, Lydia (2020) 'Expanding Theory Testing in General Relativity: LIGO and Parametrized Theories', *Studies in History and Philosophy of Science Part B: Studies in History and Philosophy of Modern Physics* **69**: 142–53. doi:10.1016/j.shpsb.2020.01.001.

Penrose, Oliver (1979) 'Foundations of Statistical Mechanics', *Reports on Progress in Physics* **42**: 1937–2006. doi:10.1088/0034-4885/42/12/002.

Penrose, Roger and RM Floyd (1971) 'Extraction of Rotational Energy from a Black Hole', *Nature Physical Science* **229**: 177–79. doi:10.1038/physci229177a0.

Prunkl, Carina EA and Christopher G Timpson (2019) 'Black Hole Entropy Is Thermodynamic Entropy'. doi:10.48550/arXiv.1903.06276.

Robertson, Katie (2019) 'Stars and Steam Engines: To What Extent Do Thermodynamics and Statistical Mechanics Apply to Self-Gravitating Systems?', *Synthese* **196**: 1783–1808. doi:10.1007/s11229-018-02032-5.

Robertson, Katie (2021) 'In Search of the Holy Grail: How to Reduce the Second Law of Thermodynamics', *British Journal for the Philosophy of Science* **73**: 987–1020. doi: 10.1086/714795.

Rosaler, Joshua (2015) 'Local Reduction in Physics', *Studies in History and Philosophy of Science Part B: Studies in History and Philosophy of Modern Physics* **50**: 54–69. doi:10.1016/j.shpsb.2015.02.004.

Saunders, Simon (2003) 'Physics and Leibniz's Principles', in Katherine Brading and Elena Castellani, eds., *Symmetries in Physics: Philosophical Reflections*: 289–307. Cambridge University Press.

Sciama, D W (1976) 'Black Holes and Their Thermodynamics', *Vistas in Astronomy* **19**: 385–401. doi:10.1016/0083-6656(76)90052-0.

Shumener, Erica (2020) 'Explaining Identity and Distinctness', *Philosophical Studies* **177**: 2073–96. doi:10.1007/s11098-019-01299-9.

Sklar, Lawrence (1993) *Physics and Chance: Philosophical Issues in the Foundations of Statistical Mechanics*. Cambridge University Press.

Susskind, Leonard, Larus Thorlacius, and John Uglum (1993) 'The Stretched Horizon and Black Hole Complementarity', *Physical Review D* **48**: 3743. doi:10.1103/PhysRevD.48.3743.

Thébault, Karim P Y, Patricia Palacios, and Sean Gryb (2021) 'On the Universality of Hawking Radiation', *British Journal for the Philosophy of Science* **72**: 809–37. doi:10.1093/bjps/axz025.

Thorne, Kip S, Kirk S Thorne, Richard H Price, and Douglas A MacDonald (1986) *Black Holes: The Membrane Paradigm*. Yale University Press.

Tong, David (2012) 'Statistical Physics'. https://www.damtp.cam.ac.uk/user/tong/statphys/sp.pdf.

Uffink, J (2006) 'Three Concepts of Irreversibility and Three Versions of the Second Law', in Friedrich Stadler and Michael Stöltzner, eds., *Time and History*: 275–88. De Gruyter.

Uffink, Jos (1996) 'Nought but Molecules in Motion', *Studies in History and Philosophy of Science Part B: Studies in History and Philosophy of Modern Physics* **27**: 373–87. doi:10.1016/S1355-2198(96)00007-X.

Unruh, William G and Robert M Wald (1983) 'How to Mine Energy from a Black Hole', *General Relativity and Gravitation* **15**: 195–99. doi:10.1007/BF00759206.

Valente, Giovanni (2017) 'On the Paradox of Reversible Processes in Thermodynamics', *Synthese* **196**: 1761–81. doi:10.1007/s11229-017-1560-3.

Wald, R M (2001) 'The Thermodynamics of Black Holes', *Living Reviews in Relativity* **4**. doi:10.12942/lrr-2001-6.

Wall, Aron C (2009) 'Ten Proofs of the Generalized Second Law', *Journal of High Energy Physics* 2009: 021. doi:10.1088/1126-6708/2009/06/021.

Wall, Aron C (2010) 'Proof of the Generalized Second Law for Rapidly Evolving Rindler Horizons', *Phys. Rev. D* **82**: 124019. doi:10.1103/PhysRevD.82.124019.

Wall, Aron C (2012) 'Proof of the Generalized Second Law for Rapidly Changing Fields and Arbitrary Horizon Slices', *Phys. Rev. D* **85**: 104049. doi:10.1103/PhysRevD.85.104049.

Wallace, David (2010) 'Gravity, Entropy, and Cosmology: In Search of Clarity', *The British Journal for the Philosophy of Science* **61**: 513–40. doi:10.1093/bjps/axp048.

Wallace, David (2012) *The Emergent Multiverse: Quantum Theory According to the Everett Interpretation*. Oxford University Press.

Wallace, David (2018) 'The Case for Black Hole Thermodynamics Part I: Phenomenological Thermodynamics', *Studies in History and Philosophy of Science Part B: Studies in History and Philosophy of Modern Physics* **64**: 52–67. doi:10.1016/j.shpsb.2018.05.002.

Wallace, David (2023) 'Thermodynamics With and Without Irreversibility'. https://philsci-archive.pitt.edu/22273/.

Wilson, Mark (2017) *Physics Avoidance and Other Essays in Conceptual Strategy*. Oxford University Press.